PARKER LTG.

USA Company

ORDERING FORM

FIXTURE: G01 PARKER ABBY

EXAMPLE: G01-32W-3520L-UNV-4K-DM-DB-02

CODE	WATTS & LUMENS	VOLTAGE	KELVIN	OPTIONS	FINISH	ACCESSORIES
G01	**110 lm/W** **32W-3520L** **45W-4950L** **70W-7700L** **90W-9900L**	**UNV**- 100-277V **STANDARD** **480V**- Special Integral	**3K**- 3000K ***4K**- 4000K **5K**- 5000K **65K**- 6500K *4K in Stock	**DM** - Dimmable **STANDARD** **EM** - Emergency **MS** - Motion Sensor **BT** - Bluetooth	**WH** - White **SL** - Silver **DB** - Dark Bronze	**01** – Junction Box with Quick Mounting Plate **STANDARD** **02** – Yoke Assembly **03** – Pendant Pipe Accessory **04** – Bird Shroud

ACCESSORIES			
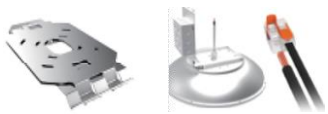 01	 02	 03	 04

PARKER LTG.

USA Company

Parker Abby
G01

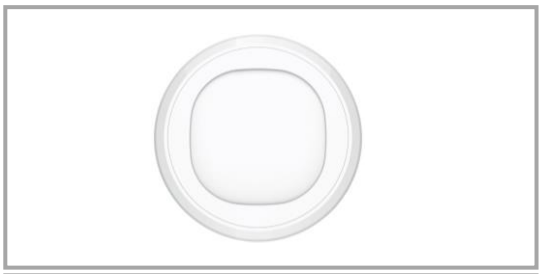

Energy Efficient and Dimmable LED High Bay Light 480V

The Parker Abby G01 LED is designed to replace traditional parking garage and canopy luminaires while offering edge-lit technology and visual comfort. Its lighter weight and smaller size makes the installation easier. Parker Abby G01 has a universal quick mount plate with click-and-lock tab releases. The driver withstands 10K V of transient line surge which offers lightning protection. Its architectural, square shape light guide provides glare reduction, optimal fixture spacing, and reduced fixture counts.

Features

- Die-Cast Aluminum Alloy Housing
- IP65 / IK08
- 5 Year Warranty
- 3G Vibration Rated
- Wet Location Junction Boxes Standard Size
- Standard 0-10V Dimmable
- Optional Motion Sensor & Emergency
- Standard in 4000K CCT
- Standard 80 CRI
- 180° Wide Beam Angle

Application

- **INDUSTRIAL**
  Warehouses, Production Halls, Parking Areas
- **COMMERCIAL & EDUCATION**
  Corridors/Stairways, Meeting Rooms, Entrance Areas, Offices, Classrooms, Cafeterias, Auditoriums, Sports Halls, Hospitals, Clinics
- **SEMI-OUTDOOR**
  Car Garages, Pools, Airports, Train/Bus Stations, Gas Stations, Parks, Toll Stations, Canopy
- **SHOP & RETAIL**
  Shopping Malls, Supermarkets, Retail Stores
- **ARCHITECTURAL**
  Exhibition Centers, Libraries, Museums, Concert Halls

PARKER LTG.

USA Company

SIZE

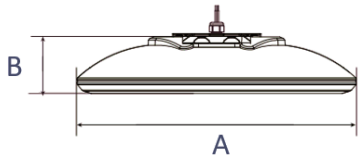

Model	Size A (inches	Size B (inches)
G01	16.14	3.37"

SPECIFICATIONS

MODEL	POWER (W)	110 lm/W
G01	32	3520
G01	45	4950
G01	70	7700
G01	90	9900

Notes: *All values in +25°C Ambient Temperature, Luminous Flux Tolerance +-5%, Output Power Tolerance +-5%.

TECHNICAL PRODUCT INFORMATION

Temperature: Ambient: +25°C
Light Source: 3030
Beam Angle: 180°
CCT Range: 3000K | 4000K | 5000K | 6500K
CRI Range: 70/80/90 SDCM 5 (SDCM 3 Optional)
AC Input: 100-277V or 480V
Light Efficiency: 110 lm/W
Waterproof: IP65 & IK08
Recommended Installation Height: 9.8-65.6ft
Lens: Polycarbonate / Vandal Resistant
L70B 10/L70850: @Ta 25C: 69000h / 78000h

Function: ☑ Dimmable ☐ Emergency ☐ Motion Sensor
Dimming to be 0-10V

ACCESSORIES

01 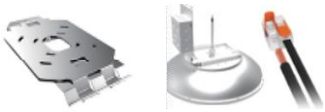

02

03

04

	IMAGE	PART #	DESIGNATION	MATERIAL	ACCESSORY USE
Standard	01	G01-JBMP01	Junction Box w/ Quick Mount Plate	Stainless Steel	Ceiling Mount Installation
Optional	02	G01-YOKE02	Yoke Assembly	Stainless Steel	Trunnion Mount Installation
	03	G01-PPA03	Pendant Pipe Accessory	Stainless Steel	Pendant Mount
	04	G01-BS04	Bird Shroud	Stainless Steel	Pendant Mount

Application

Features

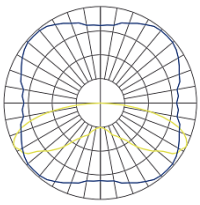

180°

The Abby G01 luminaire is designed with one optical distribution (180°), optimized for maximum space to mounting height ratio, optimal fixture spacing and reduced fixture counts.

Finish Options

White Silver Dark Bronze

Installation Overview

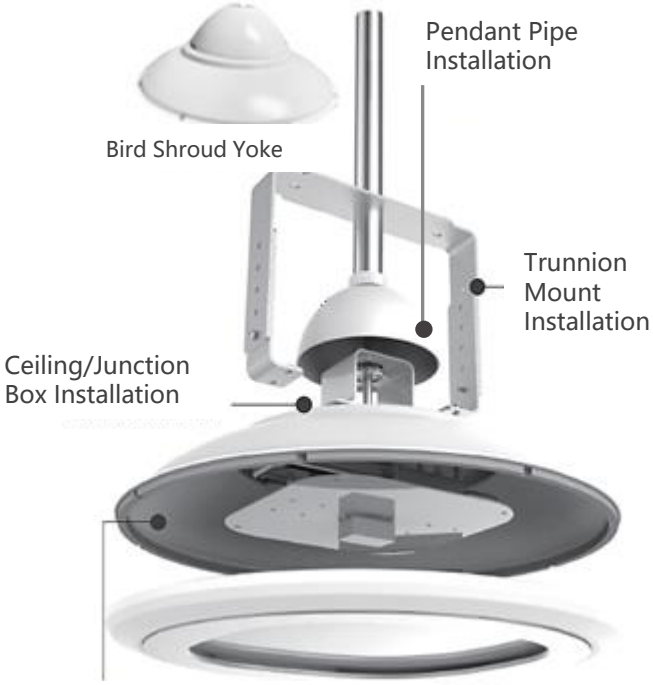

- 120V/277V Input
- Integral Battery Back Up
- Integral Motion Sensor

Installation Ceiling/Junction Box Mount

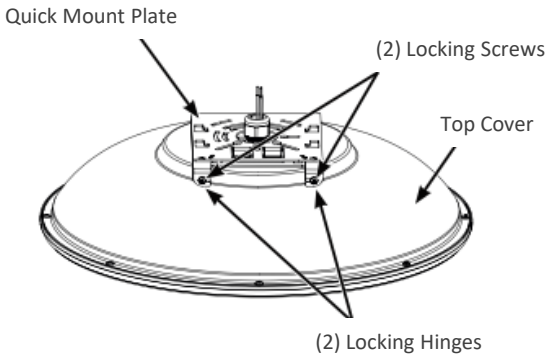

Figure 1. Loosen (Do not remove) the two locking screws. Pivot both locking hinges out to the left/right sides until they stop.

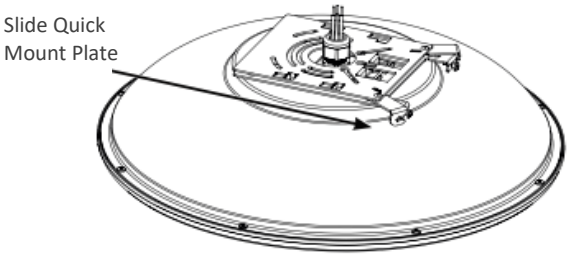

Figure 2. Slide quick mount plate forward until the plate disengages from the housing.

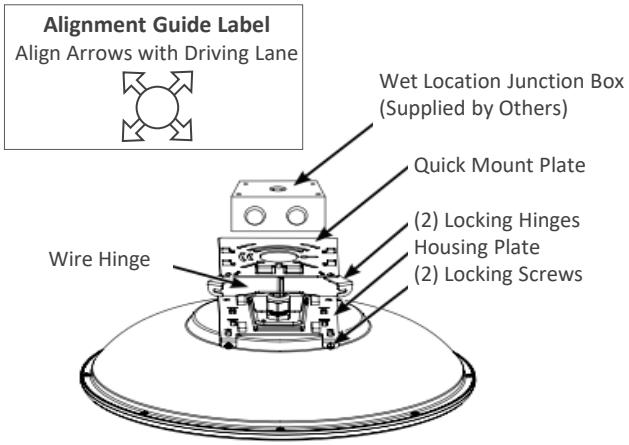

Figure 3. Unhook quick mount plate from the wire hinge.

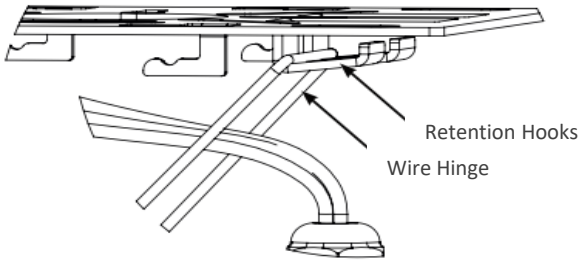

Figure 4. Install the quick mount plate onto a wet location junction box (supplied by others) using the hardware supplied (#8-32x3/4"or #6-32x3/4" screws). See **Alignment Guide Label** (left) and the alignment arrows on the quick mount plate label (Figure 3). Hang the luminaire to the quick mount plate by the wire hinge (Figure 4).

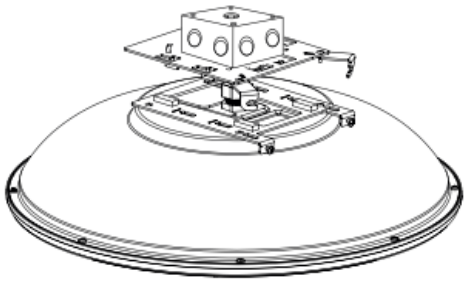

Figure 5. Make Electrical Connections. Ensure the wiring is centered through wire hinge. After electrical connections are made, push the wire splices through the center hole of the quick mount plate. Swing and lift the luminaire into position while maintaining tension on wire hinge. Failure to maintain tension may result in the wire hinge becoming dislodged. The metal tabs on the quick mount plate will align with openings in the housing plate. With luminaire lifted in place, slide the luminaire in the direction of the locking hinges. A "click" sound will occur when the luminaire is fully seated.

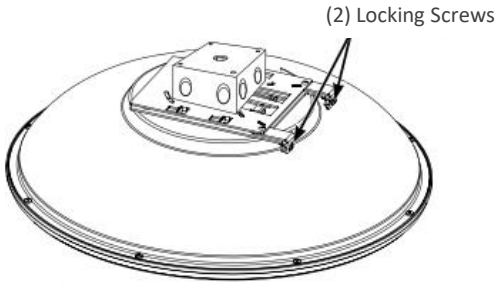

Make Electrical Connections Continued:

Note:

a. Connect supply sideline voltage wire to black lead.
b. Connect supply side neutral wire to white lead.
c. Connect supply side ground wire to green lead.

Note:

Installer must use UL Listed wet location approved wiring connections inside UL Listed wet location Junction box (supplied by others).

Figure 6. Pivot both locking hinges back into place and tighten locking screws to 10 inch-pounds.

* **Tools Required:** Phillips tip screwdriver, electrical wiring tools, wet location UL Listed wiring connectors, UL Listed wet location junction box.

Installation Trunnion & Pendant Mount

Trunnion Mount Installation (Figure 7).

1. Refer to drive lane direction label. Mount trunnion to fixture so drive lane arrows on label align to actual drive lane.
2. Secure with provided nuts.

Alignment Guide Label
Align Arrows with Driving Lane

Assemble Trunnion Bracket as Shown. Align Driving Lane Arrows

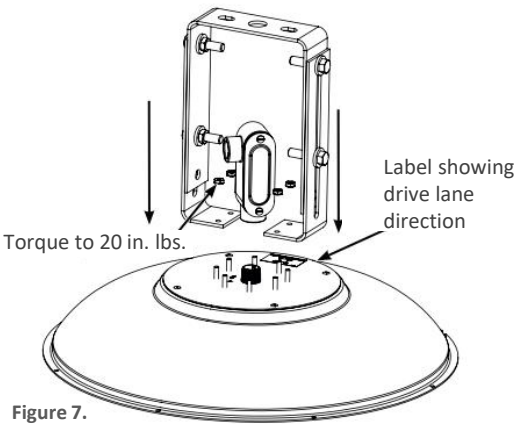

Figure 7.

Pendant Pipe Installation (Figure 8, Figure 9).

1. Mount swivel support to flush mounted junction box (supplied by other) using the provided hardware.
2. Place fixture canopy, collar and swivel canopy on stem **(Figure 8)**.
3. Screw (1) locknut on threaded end of stem to top of threading.
4. Insert stem through fixture mounting bracket.
5. Slide (1) washer and (1) locknut on to bottom of stem and tighten a minimum of 3 full turns.
6. Tighten top locknut onto fixture mounting bracket and snug with wrench. Feed wires through stem and make sure they extend out the top of the pendant.
7. Make wire connections below stem.
8. Lower fixture canopy and collar on top of fixture mounting bracket then fix collar in place with set screw
9. Insert swivel ball end of stem and fixture assembly in to swivel support.
10. Connect stem wires to power supply leads above swivel support.
11. Slide swivel canopy over swivel support and twist to engage tabs.

Figure 8.

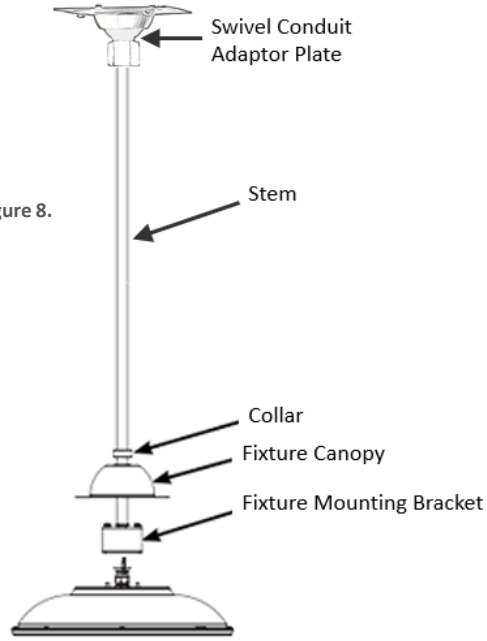

Figure 9.

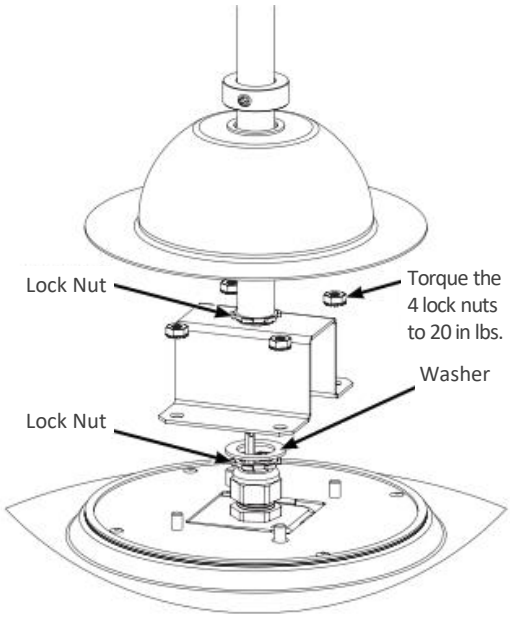

* **Tools Required:** Phillips tip screwdriver, electrical wiring tools, wet location UL Listed wiring connectors, UL Listed wet location junction box.